GRUPO POMIGLIO

ARGENTINA |

+54 9 351 201-4521
www.grupopomiglio.com
General Manuel Savio 4960, Córdoba
info@grupopomiglio.com

BRASIL |

+55 19 99962-3034
www.grupopomiglio.com
Penteado, Km 61, 16795, Hélvetia, Indaiatuba, SP
info@grupopomiglio.com

Seguinos en Instagram AR

Seguinos en Instagram BR

Contactanos

2024 VERSION 1/COPYRIGHT 2024/01

XE SERIES

ELECTRIC FORKLIFT TRUCK WITH LITHIUM POWER

With capacity of 1,500 to 3,800kg

XE SERIES

GRUPO POMIGLIO

BECOME THE FORKLIFT MEETING YOUR DIFFERENT NEEDS.

- OUTDOOR OPERATION ABILITY
- ERGONOMICS
- ADVANCED PERFORMANCE
- RELIABILITY
- HIGH EFFICIENCY
- MAINTENANCE
- COMFORT

GRUPO POMIGLIO

XE SERIES ELECTRIC FORKLIFT TRUCK WITH LITHIUM POWER

Your reliable, powerful and connected working machine.

XE series lithium battery forklifts are high quality products developed by Hangcha on the basis of the advantages of "lithium battery special structure" and "permanent magnet synchronous technology".

TAKE ON THE BIG JOBS.

Following the family design of electric forklifts, they are provided with some key parts compatible with internal combustion forklifts, and optimized mainly on the overall performance, ergonomics, reliability, maintenance, outdoor operation ability and load capacity in a bid to meet customers' use scenarios of internal combustion forklifts. The enhanced model is capable of meeting the application demand of users in heavy-duty working conditions.

STYLISH EXTERIOR

- Following the family exterior design of XH and XC lithium battery forklifts;
- Boasting smooth and powerful contour lines, and simple and elegant vehicle body, and presenting both fashion and steadiness as a whole.

ENERGY-SAVING AND EFFICIENT

- An efficient high-torque motor together with a high speed ratio gearbox significantly improves the travel speed, gradeability and lifting speed;
- The air-cooled fan built in the travel and lifting motors allow better heat dissipation and more thorough performance realization;
- Oil pump reducers are introduced in the oil pump devices for the first time, enabling the lifting motor to work in a more efficient and more energy-saving manner;

25 %
MAX. GRADEABILITY
(unladen)

18 Km/h
TRAVEL SPEED
(unladen)

500 mm/s
LIFT SPEED
(unladen)

take advantag of more pow

With the **80V dual permanent magnet synchronous motor system** with higher ***power density, as well the highly fitted speed*** reducer, motors and electrical control, under the same operating conditions, compared with the traditional asynchronous motor model, the energy consumption is reduced by 15%–20%.

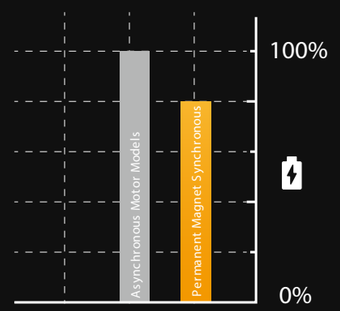

ADAPTABILITY TO DIFFERENT SCENARIOS

1 Smooth driving: Increased distance from the ground enables the forklift to adapt to rugged roads outdoors.

2 Flexible turning: With a small turning radius, the forklift can flexibly move in indoor environments such as cold stores (optional), etc.

3 Adaptability to cold weather: For the standard configuration, the battery is equipped with an electric heating module to ensure normal operation in cold weather.

4 Adaptability to rain: The protection level of the vehicle reaches level IPX4, so it can easily resist rainstorms.

COMFORTABLE EXPERIENCE

- With the advantages of lithium battery forklifts, this ergonomically designed forklift enables a wide view and a large operation space.
- The optional electronic handbrake allows more comfortable driving experience.
- The color-screen instruments are designed to have clear and intuitive graphic interfaces.

Color-screen instruments

Ergonomically designed forklift enables a wide view

RELIABLE AND DURABLE

- The enhanced drive axle and gearbox with the mast, steering axles with tapered roller bearing (for the heavy-duty model) and big tires for internal combustion forklifts can meet the demand of application in heavy-duty working conditions;
- Low center of gravity and high load margin are designed for more stable working;
- Verified in accordance with double standards of electric forklifts and internal combustion forklifts, with the enhanced test strength higher than that for the internal combustion standard, this forklift is reliable and durable.

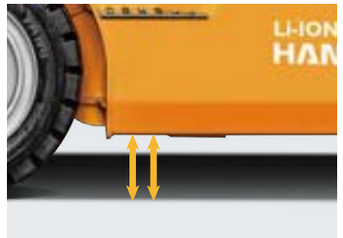

Ground clearance increased

Optional battery list

Capacity(Ah) Hangcha	1.5-mini2.0t 80V	2.0-2.5t 80V		3.0-3.8t 80V		
		Std.	H	Std.	H	H1
160	●	○	/	/	/	/
230	○	●	/	●	/	/
280	○	○	○	○	○	/
304	○	○	●	○	●	/
460	/	○	○	○	○	●
560	/	/	/	/	○	○
608	/	/	/	/	/	○

Capacity(Ah) CATL	1.5-mini2.0t 80V	2.0-2.5t 80V		3.0-3.8t 80V		
		Std.	H	Std.	H	H1
228	○	○	/	/	/	/
302	○	○	○	○	○	/
375	/	○	○	○	○	/
456	/	○	○	○	○	○
604	/	/	/	/	/	○

Note: ● Standard battery capacity; ○optional battery capacity;

GRUPO POMIGLIO

Technical Data

Distinguishing mark	1.1	Manufacturer		HANGCHA GROUP CO.,LTD.														
	1.2	Manufacturer's type designation		CPD15-XEY2-SI	CPD18-XEY2-SI	CPD20-XEXY2-SI	CPD20-XEY2-SI	CPD25-XEY2-SI	CPD20-XEY2H-SI	CPD25-XEY2H-SI	CPD30-XEY2-SI	CPD35-XEY2-SI	CPD38-XEY2-SI	CPD30-XEY2H-SI	CPD35-XEY2H-SI	CPD38-XEY2H-SI	CPD30-XEY2H1-SI	CPD35-XEY2H1-SI	CPD38-XEY2H1-SI
	1.3	Drive: electric (battery or mains), diesel, petrol, fuel gas		Electric	Electric	Electric	Electric	Electric	Electric	Electric	Electric	Electric	Electric	Electric	Electric	Electric	Electric	Electric	Electric
	1.4	Operator type: hand, pedestrian, standing, seated, order-picker		Seated	Seated	Seated	Seated	Seated	Seated	Seated	Seated	Seated	Seated	Seated	Seated	Seated	Seated	Seated	Seated
	1.5	Rated capacity/rated load	kg	1500	1800	2000	2000	2500	2000	2500	3000	3500	3800	3000	3500	3800	3000	3500	3800
	1.6	Load centre distance	c (mm)	500	500	500	500	500	500	500	500	500	500	500	500	500	500	500	500
	1.8	Load distance, centre of drive axle to fork	x (mm)	405	410	405	462.5	462.5	462.5	462.5	477.5	482.5	482.5	477.5	482.5	482.5	477.5	482.5	482.5
	1.9	Wheelbase	y (mm)	1450	1450	1450	1650	1650	1650	1650	1750	1750	1750	1750	1750	1750	1750	1750	1750
Weight	2.1	Service Weight	kg	2850	3100	3200	3450	3840	3495	3885	4250	4630	4860	4310	4690	4920	4440	4820	5050
	2.2	Axle loading, laden front/rear	kg	4200/650	4450/650	4570/630	4720/730	5510/830	4740/755	5530/855	6350/900	7170/960	7650/1010	6370/940	7190/1000	7670/1050	6480/960	7300/1020	7780/1070
	2.3	Axle loading, unladen front/rear	kg	1170/1680	1200/1900	1260/1940	1550/1900	1580/2260	1570/1925	1600/2285	1730/2520	1760/2870	1780/3080	1720/2590	1770/2920	1790/3130	1775/2665	1815/3005	1830/3220
Tyres, chassis	3.1	Tyres: solid rubber, superelastic, pneumatic, polyurethane		Pneumatic	Pneumatic	Pneumatic	Pneumatic	Pneumatic	Pneumatic	Pneumatic	Pneumatic	Pneumatic	Pneumatic	Pneumatic	Pneumatic	Pneumatic	Pneumatic	Pneumatic	Pneumatic
	3.2	Tyre size, front		6.50-10-10PR	6.50-10-10PR	6.50-10-10PR	7.00-12-12PR	7.00-12-12PR	7.00-12-12PR	7.00-12-12PR	28x9-15-14PR	28x9-15-14PR	28x9-15-14PR	28x9-15-14PR	28x9-15-14PR	28x9-15-14PR	28x9-15-14PR	28x9-15-14PR	28x9-15-14PR
	3.3	Tyre size, rear		5.00-8-10PR	5.00-8-10PR	5.00-8-10PR	6.00-9-10PR	6.00-9-10PR	6.00-9-10PR	6.00-9-10PR	6.50-10-10PR	6.50-10-10PR	6.50-10-10PR	6.50-10-10PR	6.50-10-10PR	6.50-10-10PR	6.50-10-10PR	6.50-10-10PR	6.50-10-10PR
	3.5	Wheels, number front / rear (x = driven wheels)		2x/2	2x/2	2x/2	2x/2	2x/2	2x/2	2x/2	2x/2	2x/2	2x/2	2x/2	2x/2	2x/2	2x/2	2x/2	2x/2
	3.6	Tread, front	b_{10} (mm)	890	890	890	965	965	965	965	1005	1005	1005	1005	1005	1005	1005	1005	1005
	3.7	Tread, rear	b_{11} (mm)	897.5	897.5	897.5	973	973	973	973	975	975	975	975	975	975	975	975	975
Dimensions	4.1	Tilt of mast/fork carriage forward/backward	a/b (°)	6/12	6/12	6/12	6/12	6/12	6/12	6/12	6/12	6/12	6/12	6/12	6/12	6/12	6/12	6/12	6/12
	4.2	Height, mast lowered	h_1 (mm)	1995	1995	1995	1999	1999	1999	1999	2054	2169	2169	2054	2169	2169	2054	2169	2169
	4.3	Free lift	h_2 (mm)	155	155	160	160	160	160	160	165	170	170	165	170	170	165	170	170
	4.4	Lift	h_3 (mm)	3000	3000	3000	3000	3000	3000	3000	3000	3000	3000	3000	3000	3000	3000	3000	3000
	4.5	Height, mast extended	h_4 (mm)	3955	3955	3955	4046	4046	4046	4046	4145	4145	4145	4145	4145	4145	4145	4145	4145
	4.7	Height of overhead guard (cabin)	h_6 (mm)	2155	2155	2155	2165	2165	2165	2165	2180	2180	2180	2180	2180	2180	2180	2180	2180
	4.8	Seat height/stand height	h_7 (mm)	1101	1101	1101	1111	1111	1111	1111	1126	1126	1126	1126	1126	1126	1144	1144	1144
	4.12	Coupling height	h_{10} (mm)	500	500	500	500	500	500	500	515	515	515	515	515	515	515	515	515
	4.19	Overall length	l_1 (mm)	3150	3150	3150	3570	3570	3570	3570	3735	3740	3740	3735	3740	3740	3735	3740	3740
	4.20	Length to face of forks	l_2 (mm)	2230	2235	2230	2500	2500	2500	2500	2665	2670	2670	2665	2670	2670	2665	2670	2670
	4.21	Overall width	b_1/b_2 (mm)	1126	1126	1126	1225	1225	1225	1225	1225	1225	1225	1225	1225	1225	1225	1225	1225
	4.22	Fork dimensions	s / e / l (mm)	35/100/920	35/100/920	40/100/920	40/122/1070	40/122/1070	40/122/1070	40/122/1070	45/122/1070	50/122/1070	50/122/1070	45/122/1070	50/122/1070	50/122/1070	45/122/1070	50/122/1070	50/122/1070
	4.23	Fork carriage ISO 2328, class/type A,B		ISO2328 2A	ISO2328 2A	ISO2328 2A	ISO2328 2A	ISO2328 2A	ISO2328 2A	ISO2328 2A	ISO2328 3A	ISO2328 3A	ISO2328 3A	ISO2328 3A	ISO2328 3A	ISO2328 3A	ISO2328 3A	ISO2328 3A	ISO2328 3A
	4.24	Fork-carriage width	b_3 (mm)	1000	1000	1000	1038	1038	1038	1038	1100	1100	1100	1100	1100	1100	1100	1100	1100
	4.31	Ground clearance, laden, below mast	m_1 (mm)	115	115	115	125	125	125	125	139	139	139	139	139	139	139	139	139
	4.32	Ground clearance, centre of wheelbase	m_2 (mm)	130	130	130	140	140	140	140	155	155	155	155	155	155	155	155	155
	4.34.1	Aisle width for pallets 1000 x 1200 crossways	A_{st} (mm)	3640	3645	3640	3862.5	3862.5	3862.5	3862.5	4027.5	4032.5	4032.5	4027.5	4032.5	4032.5	4097.5	4102.5	4102.5
	4.34.2	Aisle width for pallets 800 x 1200 lengthways		3840	3845	3840	4062.5	4062.5	4062.5	4062.5	4227.5	4232.5	4232.5	4227.5	4232.5	4232.5	4297.5	4302.5	4302.5
	4.35	Turning radius	W_a (mm)	2035	2035	2035	2200	2200	2200	2200	2350	2350	2350	2350	2350	2350	2420	2420	2420
	4.36	Internal turning radius	b_{13} (mm)	/	/	/	/	/	/	/	/	/	/	/	/	/	/	/	/
Performance data	5.1	Travel speed, laden/unladen	km/h	15/15	15/15	15/15	14/15	14/15	17/18	17/18	14/15	14/15	14/15	17/18	17/18	17/18	17/18	17/18	17/18
	5.2	Lift speed, laden/unladen	mm/s	300/430	300/430	300/430	400/500	400/500	400/500	400/500	400/500	350/440	350/440	400/500	350/440	350/440	400/500	350/440	350/440
	5.3	Lowering speed, laden/unladen	mm/s	490/560	490/560	490/560	450/500	450/500	450/500	450/500	440/370	440/370	440/370	440/370	440/370	440/370	500/390	500/390	500/390
	5.6	Max. Drawbar pull, laden/unladen	N	7000	7000	7000	11000	11000	11000	11000	11000	11000	11000	13000	13000	13000	13000	13000	13000
	5.8	Max. gradeability, laden/unladen	%	18/25	16/25	15/25	18/25	18/25	20/25	20/25	18/25	16/25	15/25	20/25	18/25	17/25	20/25	18/25	17/25
	5.9	Acceleration time, laden/unladen (0-10m)	s	/	/	/	/	/	/	/	/	/	/	/	/	/	/	/	/
	5.10	Service brake		Hydraulic	Hydraulic	Hydraulic	Hydraulic	Hydraulic	Hydraulic	Hydraulic	Hydraulic	Hydraulic	Hydraulic	Hydraulic	Hydraulic	Hydraulic	Hydraulic	Hydraulic	Hydraulic
	5.11	Parking brake		Mechanical	Mechanical	Mechanical	Mechanical	Mechanical	Mechanical	Mechanical	Mechanical	Mechanical	Mechanical	Mechanical	Mechanical	Mechanical	Mechanical	Mechanical	Mechanical
Electric-engine	6.1	Drive motor rating S2 60 min	kW	10AC	10AC	10AC	15AC	15AC	16AC	16AC	15AC	15AC	15AC	16AC	16AC	16AC	16AC	16AC	16AC
	6.2	Lift motor rating at S3 15%	kW	13AC	13AC	13AC	24AC	24AC	24AC	24AC	24AC	24AC	24AC	24AC	24AC	24AC	24AC	24AC	24AC
	6.3	Battery acc. to DIN 43531/35/36 A,B,C, no		/	/	/	/	/	/	/	/	/	/	/	/	/	/	/	/
	6.4	Battery voltage, nominal capacity K5	(V)/(Ah)orkWh	80/160	80/160	80/160	80/230	80/230	80/304	80/304	80/230	80/230	80/230	80/304	80/304	80/304	80/460	80/460	80/460
	6.5	Battery weight	kg	140	140	140	180	180	225	225	200	200	200	240	240	240	310	310	310
Addition data	10.1	Operating pressure for attachments	MPa	15	18.5	18.5	18.5	18.5	18.5	18.5	18.5	18.5	21	18.5	18.5	21	18.5	18.5	21
	10.2	Oil volume for attachments	ℓ/min	65	65	65	65	65	65	65	65	65	65	65	65	65	65	65	65

GRUPO POMIGLIO

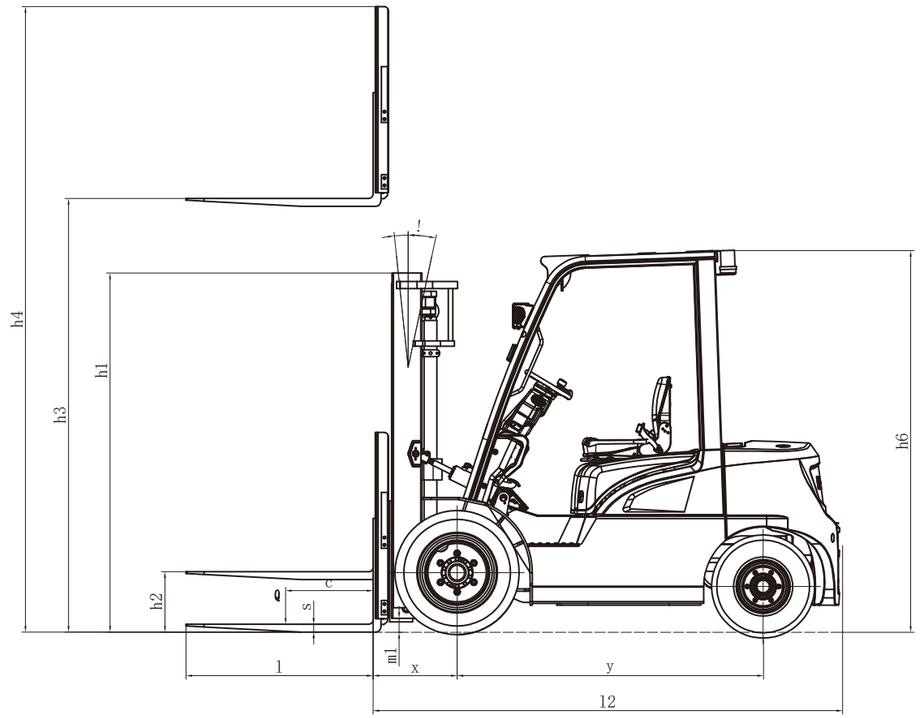

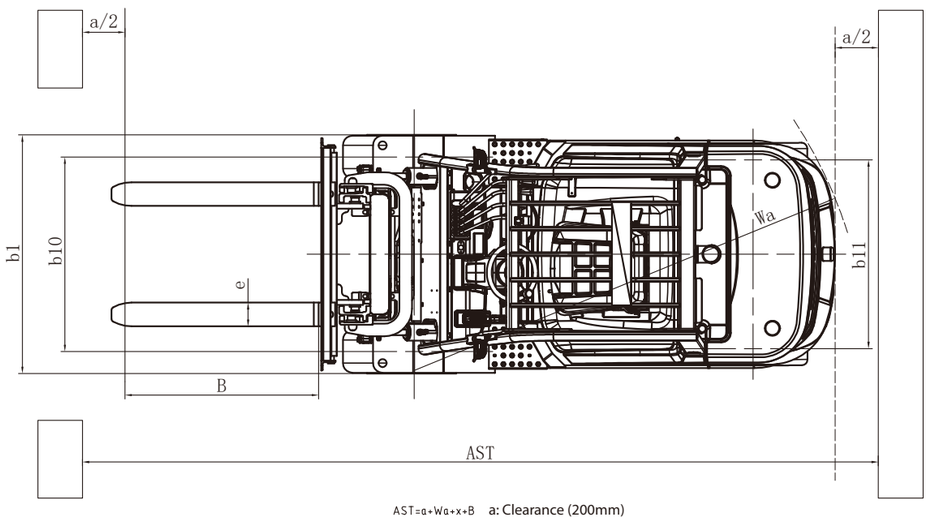

AST=a+Wa+x+B a: Clearance (200mm)

RATED CAPACITIES AND LOAD CENTRES GRAPH

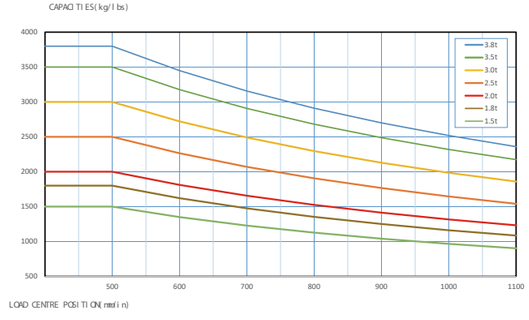

1.5-mini2.0t Mast specification

Type	Model			Lifting height	Lowered overall height		Overall height				Free lift height				Tilt range	Capacity (Mast vertical to ground)					
							Without backrest		With backrest		Without backrest		With backrest		FWD/RWD	Load Capacity at 500mm					
																Single Tire			Double tire		
					1.5/1.8t	mini2.0t	1.5/1.8t	mini2.0t	1.5/1.8t	mini2.0t	1.5/1.8t	mini2.0t	1.5/1.8t	mini2.0t		1.5t	1.8t	mini2.0t	1.5t	1.8t	mini2.0t
	1.5t	1.8t	mini2.0t	mm	mm	mm	mm	mm	mm	mm	mm	mm	mm	mm	(°)	kg	kg	kg	kg	kg	kg
Duplex wide view mast	A2A15M200	A2A18M200	XEX20M200	2000	1495	1495	2548	2504	2955	2955	155	160	155	160	6/6	1500	1800	2000	1500	1800	2000
	A2A15M250	A2A18M250	XEX20M250	2500	1745	1745	3048	3004	3455	3455	155	160	155	160	6/12	1500	1800	2000	1500	1800	2000
	A2A15M270	A2A18M270	XEX20M270	2700	1845	1845	3248	3204	3655	3655	155	160	155	160	6/12	1500	1800	2000	1500	1800	2000
	A2A15M300	A2A18M300	XEX20M300	3000	1995	1995	3548	3504	3955	3955	155	160	155	160	6/12	1500	1800	2000	1500	1800	2000
	A2A15M330	A2A18M330	XEX20M330	3300	2145	2145	3848	3804	4255	4255	155	160	155	160	6/12	1500	1800	2000	1500	1800	2000
	A2A15M360	A2A18M360	XEX20M360	3600	2345	2345	4148	4104	4555	4555	155	160	155	160	6/12	1500	1800	2000	1500	1800	2000
	A2A15M400	A2A18M400	XEX20M400	4000	2595	2595	4548	4540	4955	4955	155	160	155	160	6/6	1500	1800	2000	1500	1800	2000
	A2A15M430	A2A18M430	XEX20M430	4300	2745	2745	4848	4840	5255	5255	155	160	155	160	6/6	1500	1700	1900	1500	1750	2000
	A2A15M450	A2A18M450	XEX20M450	4500	2845	2845	5048	5040	5455	5455	155	160	155	160	6/6	1500	1650	1850	1500	1700	1900
	A2A15M480	A2A18M480	XEX20M480	4800	2995	2995	5348	5340	5755	5755	155	160	155	160	6/6	1400	1600	1800	1500	1650	1850
	A2A15M500	A2A18M500	XEX20M500	5000	3095	3095	5548	5540	5955	5955	155	160	155	160	6/6	1350	1550	1700	1400	1600	1750
Duplex full-free mast	A2A15U250	A2A18U250	XEX20U250	2500	1760	1745	3074	3060	3445	3445	1185	1185	815	800	6/12	1500	1800	2000	1500	1800	2000
	A2A15U270	A2A18U270	XEX20U270	2700	1860	1845	3274	3260	3645	3645	1285	1285	915	900	6/12	1500	1800	2000	1500	1800	2000
	A2A15U300	A2A18U300	XEX20U300	3000	2010	1995	3574	3560	3945	3945	1435	1435	1065	1050	6/12	1500	1800	2000	1500	1800	2000
	A2A15U330	A2A18U330	XEX20U330	3300	2160	2145	3874	3860	4245	4245	1585	1585	1215	1200	6/12	1500	1800	2000	1500	1800	2000
	A2A15U360	A2A18U360	XEX20U360	3600	2310	2295	4174	4160	4545	4545	1735	1735	1365	1350	6/12	1500	1800	2000	1500	1800	2000
	A2A15U400	A2A18U400	XEX20U400	4000	2560	2545	4574	4560	4945	4945	1985	1985	1615	1600	6/12	1500	1800	2000	1500	1800	2000
Triplex full-free mast	A2A15N400	A2A18N400	XEX20N400	4000	1960	1945	4694	4555	4955	4955	1276	1392	1015	1000	6/6	1500	1800	1950	1500	1800	2000
	A2A15N430	A2A18N430	XEX20N430	4300	2060	2045	4994	4855	5255	5255	1376	1492	1115	1100	6/6	1500	1650	1850	1500	1800	1950
	A2A15N450	A2A18N450	XEX20N450	4500	2110	2095	5194	5037	5455	5455	1426	1542	1165	1150	6/6	1500	1650	1800	1500	1750	1900
	A2A15N470	A2A18N470	XEX20N470	4700	2210	2195	5394	5237	5655	5655	1526	1642	1265	1250	6/6	1400	1600	1750	1500	1650	1850
	A2A15N480	A2A18N480	XEX20N480	4800	2260	2195	5494	5337	5755	5755	1576	1642	1315	1250	6/6	1400	1600	1750	1500	1650	1850
	A2A15N500	A2A18N500	XEX20N500	5000	2360	2295	5694	5537	5955	5955	1676	1742	1415	1350	6/6	1400	1550	1700	1450	1600	1800
	A2A15N550	A2A18N550	XEX20N550	5500	2560	2445	6194	6037	6455	6455	1876	1892	1615	1500	3/6	1250	1500	1650	1350	1550	1750
	A2A15N600	A2A18N600	XEX20N600	6000	2810	2645	6694	6537	6955	6955	2126	2092	1865	1700	3/6	1100	1300	1450	1150	1400	1500

SUBTRACT 100kg WITH INTEGRAL SIDESHIFTER,SUBTRACT 150kg WITH EXTERNAL SIDESHIFTER.

2-2.5t Mast specification

Type	Model	Lifting height	Lowered overall height	Overall height		Free lift height		Tilt range	Capacity (Mast vertical to ground)			
				Without backrest	With backrest	Without backrest	With backrest	FWD/RWD	Load Capacity at 500mm			
									Single Tire		Double tire	
									2t	2.5t	2t	2.5t
		mm	mm	mm	mm	mm	mm	(°)	kg	kg	kg	kg
Duplex wide view mast	A2A25M200	2000	1499	2707	3046	160	160	6/6	2000	2500	2000	2500
	A2A25M250	2500	1749	3207	3546	160	160	6/12	2000	2500	2000	2500
	A2A25M270	2700	1849	3407	3746	160	160	6/12	2000	2500	2000	2500
	A2A25M300	3000	1999	3707	4046	160	160	6/12	2000	2500	2000	2500
	A2A25M330	3300	2149	4007	4346	160	160	6/12	2000	2500	2000	2500
	A2A25M360	3600	2349	4307	4646	160	160	6/12	2000	2500	2000	2500
	A2A25M400	4000	2599	4707	5046	160	160	6/6	2000	2500	2000	2500
	A2A25M430	4300	2749	5007	5346	160	160	6/6	2000	2500	2000	2500
	A2A25M450	4500	2849	5207	5546	160	160	6/6	2000	2450	2000	2500
	A2A25M480	4800	2999	5507	5846	160	160	6/6	1950	2350	2000	2450
	A2A25M500	5000	3099	5707	6046	160	160	6/6	1850	2300	1950	2350
	A2A25M550	5500	3349	6207	6546	160	160	3/6	1750	2150	1900	2200
	A2A25M600	6000	3599	6707	7046	160	160	3/6	1550	1900	1800	2000
Duplex full-free mast	A2A25U250	2500	1764	3179	3546	1025	619	6/12	2000	2500	2000	2500
	A2A25U270	2700	1864	3379	3746	1125	719	6/12	2000	2500	2000	2500
	A2A25U300	3000	2014	3679	4046	1275	869	6/12	2000	2500	2000	2500
	A2A25U330	3300	2164	3979	4346	1425	1019	6/12	2000	2500	2000	2500
	A2A25U360	3600	2314	4279	4646	1575	1169	6/12	2000	2500	2000	2500
	A2A25U400	4000	2564	4679	5046	1825	1419	6/12	2000	2500	2000	2500
Triplex full-free mast	A2A25N400	4000	1964	4739	5046	1285	918	6/6	2000	2500	2000	2500
	A2A25N430	4300	2064	5039	5346	1385	1018	6/6	2000	2450	2000	2500
	A2A25N450	4500	2114	5239	5546	1435	1068	6/6	2000	2350	2000	2450
	A2A25N470	4700	2214	5439	5746	1535	1168	6/6	1950	2250	2000	2350
	A2A25N480	4800	2264	5539	5846	1585	1218	6/6	1950	2250	2000	2350
	A2A25N500	5000	2364	5739	6046	1685	1318	6/6	1850	2150	1950	2250
	A2A25N550	5500	2564	6239	6546	1885	1518	3/6	1750	2050	1900	2100
	A2A25N600	6000	2814	6739	7046	2135	1768	3/6	1550	1850	1800	1950
	A2A25N650	6500	3014	7239	7546	2335	1968	3/6	/	/	1550	1800
	A2A25N700	7000	3264	7764	8046	2500	2218	3/6	/	/	1150	1450

SUBTRACT 100kg WITH INTEGRAL SIDESHIFTER,SUBTRACT 150kg WITH EXTERNAL SIDESHIFTER.

3-3.8t Mast specification

Type	Model		Lifting height	Lowered overall height		Overall height				Free lift height				Tilt range	Capacity (Mast vertical to ground)					
						Without backrest		With backrest		Without backrest		With backrest		FWD/RWD	Load Capacity at 500mm					
															Single Tire			Double tire		
				3t	3.5/3.8t	3t	3.5/3.8t	3t	3.5/3.8t	3t	3.5/3.8t	3t	3.5/3.8t		3t	3.5t	3.8t	3t	3.5t	3.8t
	3t	3.5/3.8t	mm	mm	mm	mm	mm	mm	mm	mm	mm	mm	mm	(°)	kg	kg	kg	kg	kg	kg
Duplex wide view mast	A2A30M200	A2A35M200	2000	1554	1669	2767	2842	3145	3145	165	170	165	170	6/6	3000	3500	3800	3000	3500	3800
	A2A30M250	A2A35M250	2500	1804	1919	3267	3342	3645	3645	165	170	165	170	6/12	3000	3500	3800	3000	3500	3800
	A2A30M270	A2A35M270	2700	1904	2019	3467	3542	3845	3845	165	170	165	170	6/12	3000	3500	3800	3000	3500	3800
	A2A30M300	A2A35M300	3000	2054	2169	3767	3842	4145	4145	165	170	165	170	6/12	3000	3500	3800	3000	3500	3800
	A2A30M330	A2A35M330	3300	2204	2319	4067	4142	4445	4445	165	170	165	170	6/12	3000	3500	3800	3000	3500	3800
	A2A30M360	A2A35M360	3600	2404	2469	4367	4442	4745	4745	165	170	165	170	6/12	3000	3500	3800	3000	3500	3800
	A2A30M400	A2A35M400	4000	2654	2769	4767	4842	5145	5145	165	170	165	170	6/12	3000	3500	3800	3000	3500	3800
	A2A30M430	A2A35M430	4300	2804	2919	5067	5142	5445	5445	165	170	165	170	6/6	3000	3400	3700	3000	3500	3800
	A2A30M450	A2A35M450	4500	2904	3019	5267	5342	5645	5645	165	170	165	170	6/6	3000	3300	3600	3000	3400	3700
	A2A30M480	A2A35M480	4800	3054	3169	5567	5642	5945	5945	165	170	165	170	6/6	2950	3200	3500	3000	3300	3600
	A2A30M500	A2A35M500	5000	3154	3269	5767	5842	6145	6145	165	170	165	170	6/6	2850	3100	3400	2900	3200	3500
	A2A30M550	A2A35M550	5500	3404	3519	6267	6342	6645	6645	165	170	165	170	3/6	2670	3000	3300	2750	3100	3400
	A2A30M600	A2A35M600	6000	3654	3769	6767	6842	7145	7145	165	170	165	170	3/6	2350	2650	2950	2500	2800	3100
Duplex full-free mast	A2A30U250	A2A35U250	2500	1834	1934	3316	3391	3645	3645	1018	1043	689	789	6/12	3000	3500	3800	3000	3500	3800
	A2A30U270	A2A35U270	2700	1934	2034	3516	3591	3845	3845	1118	1143	789	889	6/12	3000	3500	3800	3000	3500	3800
	A2A30U300	A2A35U300	3000	2084	2184	3816	3891	4145	4145	1268	1293	939	1039	6/12	3000	3500	3800	3000	3500	3800
	A2A30U330	A2A35U330	3300	2234	2334	4116	4191	4445	4445	1418	1443	1089	1189	6/12	3000	3500	3800	3000	3500	3800
	A2A30U360	A2A35U360	3600	2384	2484	4416	4491	4745	4745	1568	1593	1239	1339	6/12	3000	3500	3800	3000	3500	3800
	A2A30U400	A2A35U400	4000	2634	2734	4816	4891	5145	5145	1818	1843	1489	1589	6/12	3000	3500	3800	3000	3500	3800
Triplex full-free mast	A2A30N400	A2A35N400	4000	2019	2119	4816	4891	5145	5145	1203	1228	874	974	6/6	3000	3400	3700	3000	3500	3800
	A2A30N430	A2A35N430	4300	2119	2219	5116	5191	5445	5445	1303	1328	974	1074	6/6	3000	3300	3600	3000	3400	3700
	A2A30N450	A2A35N450	4500	2169	2319	5316	5391	5645	5645	1353	1428	1024	1174	6/6	3000	3200	3500	3000	3300	3600
	A2A30N470	A2A35N470	4700	2269	2419	5516	5591	5845	5845	1453	1528	1124	1274	6/6	2900	3100	3400	2950	3200	3500
	A2A30N480	A2A35N480	4800	2319	2469	5616	5691	5945	5945	1503	1578	1174	1324	6/6	2900	3100	3400	2950	3200	3500
	A2A30N500	A2A35N500	5000	2419	2619	5816	5891	6145	6145	1603	1728	1274	1474	6/6	2850	3100	3350	2900	3200	3450
	A2A30N550	A2A35N550	5500	2619	2869	6316	6391	6645	6645	1803	1978	1474	1724	3/6	2670	3000	3250	2750	3100	3350
	A2A30N600	A2A35N600	6000	2869	3119	6816	6919	7145	7145	2053	2200	1724	1974	3/6	2350	2650	2900	2500	2800	3050
	A2A30N650	A2A35N650	6500	3119	3369	7316	7391	7645	7645	2303	2478	1974	2224	3/6	/	/	/	2200	2400	2650
	A2A30N700	A2A35N700	7000	3369	3619	7816	7919	8145	8145	2553	2700	2274	2474	3/6	/	/	/	1850	2050	2250

SUBTRACT 100kg WITH INTEGRAL SIDESHIFTER,SUBTRACT 200kg WITH EXTERNAL SIDESHIFTER.
3.5-3.8t can be equipped with 4.5m triplex mast for container work(2169mm).

3-3.8(H1)t Mast specification

Type	Model		Lifting height	Lowered overall height		Overall height				Free lift height				Tilt range	Capacity (Mast vertical to ground)					
						Without backrest		With backrest		Without backrest		With backrest		FWD/RWD	Load Capacity at 500mm					
															Single Tire			Double tire		
				3t	3.5/3.8t	3t	3.5/3.8t	3t	3.5/3.8t	3t	3.5/3.8t	3t	3.5/3.8t		3t	3.5t	3.8t	3t	3.5t	3.8t
	3t	3.5/3.8t	mm	mm	mm	mm	mm	mm	mm	mm	mm	mm	mm	(°)	kg	kg	kg	kg	kg	kg
Duplex wide view mast	XR30M200	XRZ35M200	2000	1554	1669	2767	2842	3145	3145	165	170	165	170	6/6	3000	3500	3800	3000	3500	3800
	XR30M250	XRZ35M250	2500	1804	1919	3267	3342	3645	3645	165	170	165	170	6/12	3000	3500	3800	3000	3500	3800
	XR30M270	XRZ35M270	2700	1904	2019	3467	3542	3845	3845	165	170	165	170	6/12	3000	3500	3800	3000	3500	3800
	XR30M300	XRZ35M300	3000	2054	2169	3767	3842	4145	4145	165	170	165	170	6/12	3000	3500	3800	3000	3500	3800
	XR30M330	XRZ35M330	3300	2204	2319	4067	4142	4445	4445	165	170	165	170	6/12	3000	3500	3800	3000	3500	3800
	XR30M360	XRZ35M360	3600	2404	2469	4367	4442	4745	4745	165	170	165	170	6/12	3000	3500	3800	3000	3500	3800
	XR30M400	XRZ35M400	4000	2654	2769	4767	4842	5145	5145	165	170	165	170	6/12	3000	3500	3800	3000	3500	3800
	XR30M430	XRZ35M430	4300	2804	2919	5067	5142	5445	5445	165	170	165	170	6/6	3000	3400	3700	3000	3500	3800
	XR30M450	XRZ35M450	4500	2904	3019	5267	5342	5645	5645	165	170	165	170	6/6	3000	3300	3600	3000	3400	3700
	XR30M480	XRZ35M480	4800	3054	3169	5567	5642	5945	5945	165	170	165	170	6/6	2950	3200	3500	3000	3300	3600
	XR30M500	XRZ35M500	5000	3154	3269	5767	5842	6145	6145	165	170	165	170	6/6	2850	3100	3400	2900	3200	3500
	XR30M550	XRZ35M550	5500	3404	3519	6267	6342	6645	6645	165	170	165	170	3/6	2670	3000	3300	2750	3100	3400
	XR30M600	XRZ35M600	6000	3654	3769	6767	6842	7145	7145	165	170	165	170	3/6	2350	2650	2950	2500	2800	3100
Duplex full-free mast	XR30U250	XRZ35U250	2500	1834	1934	3316	3391	3645	3645	1018	1043	689	789	6/12	3000	3500	3800	3000	3500	3800
	XR30U270	XRZ35U270	2700	1934	2034	3516	3591	3845	3845	1118	1143	789	889	6/12	3000	3500	3800	3000	3500	3800
	XR30U300	XRZ35U300	3000	2084	2184	3816	3891	4145	4145	1268	1293	939	1039	6/12	3000	3500	3800	3000	3500	3800
	XR30U330	XRZ35U330	3300	2234	2334	4116	4191	4445	4445	1418	1443	1089	1189	6/12	3000	3500	3800	3000	3500	3800
	XR30U360	XRZ35U360	3600	2384	2484	4416	4491	4745	4745	1568	1593	1239	1339	6/12	3000	3500	3800	3000	3500	3800
	XR30U400	XRZ35U400	4000	2634	2734	4816	4891	5145	5145	1818	1843	1489	1589	6/12	3000	3500	3800	3000	3500	3800
Triplex full-free mast	XR30N400	XRZ35N400	4000	2019	2119	4816	4891	5145	5145	1203	1228	874	974	6/6	3000	3400	3700	3000	3500	3800
	XR30N430	XRZ35N430	4300	2119	2219	5116	5191	5445	5445	1303	1328	974	1074	6/6	3000	3300	3600	3000	3400	3700
	XR30N450	XRZ35N450	4500	2169	2319	5316	5391	5645	5645	1353	1428	1024	1174	6/6	3000	3200	3500	3000	3300	3600
	XR30N470	XRZ35N470	4700	2269	2419	5516	5591	5845	5845	1453	1528	1124	1274	6/6	2900	3100	3400	2950	3200	3500
	XR30N480	XRZ35N480	4800	2319	2469	5616	5691	5945	5945	1503	1578	1174	1324	6/6	2900	3100	3400	2950	3200	3500
	XR30N500	XRZ35N500	5000	2419	2619	5816	5891	6145	6145	1603	1728	1274	1474	6/6	2850	3100	3350	2900	3200	3450
	XR30N550	XRZ35N550	5500	2619	2869	6316	6391	6645	6645	1803	1978	1474	1724	3/6	2670	3000	3250	2750	3100	3350
	XR30N600	XRZ35N600	6000	2869	3119	6816	6919	7145	7145	2053	2200	1724	1974	3/6	2350	2650	2900	2500	2800	3050
	XR30N650	XRZ35N650	6500	3119	3369	7316	7391	7645	7645	2303	2478	1974	2224	3/6	/	/	/	2200	2400	2650
	XR30N700	XRZ35N700	7000	3369	3619	7816	7919	8145	8145	2553	2700	2274	2474	3/6	/	/	/	1850	2050	2250

SUBTRACT 100kg WITH INTEGRAL SIDESHIFTER,SUBTRACT 200kg WITH EXTERNAL SIDESHIFTER.
3.5-3.8t can be equipped with 4.5m triplex mast for container work(2219mm).

Features

Color	Standard	Options
Yellow-black	●	
Other customized color		○
Particular market		
CE Standard		○
Cold storage environment		
-18°C/-30°C		○
Mast		
Standard duplex mast	●	
Configuration Table of the Mast		○
Fork and attachment		
Standard fork	●	
Fork arm carrier	●	
Load backrest	●	
Non-standard series fork		○
Various attachments		○
Tires		
Pneumatic tire (single)	●	
Pneumatic tire (dual)		○
Solid tire (single)		○
Solid tire (single)		○
Multiway valve		
Double multi-way valve	●	
Potentionmeter for lift	●	
Triple valve		○
Quadruple valve		○
Quintuple valve (2.0-3.8t)		○
Tiller		
Lifting and tilting level	●	
Thumb switch		○
Battery		
Standard lithium battery	●	
Large-capacity lithium battery		○
Quick-change lithium battery		○
Light		
LED head lamp	●	
Turn signal lamp	●	
LED rear combination lamp	●	
Common alarm lamp		○
Acoustic and optical alarm lamp		○
LED rear lamp		○
Blue light		○
Straight projection lamp		○
Horn		
Electric horn	●	
Reverse buzzer	●	
Right rear armrest with horn button		○
Smart module		
Jiachen smart module		○
Safety management module		○

Features

Safety configuration	Standard	Options
Emergency power-off switch	●	
Fuse box	●	
Soft landing	●	
Reversing radar		○
OPS system		○
Fire extinguisher		○
Ascending buffering		○
Parking brake		
Mechanical handbrake	●	
EPB(Electric Parking Brake)		○
Instrument rack space		
Smart color-screen instrument (speed mode selection)	●	
Combination switch	●	
Cigarette lighter		○
USB port		○
Electronic code lock (start by swiping a card)		○
Driving space		
Standard overhead guard	●	
Central rear view mirror	●	
Front windshield		○
PVC ceiling		○
Cab		○
Electric fan		○
Left and right rear view mirrors		○
Seat		
Standard seat	●	
Fully-suspended seat		○
Semi-suspended seat		○
Other standard configuration		
Drive and lifting controllers	●	
Driving and lifting motors	●	
Oil pump reducer	●	
Silent gear pump	●	
DC-DC converter	●	
Pedal pad	●	
Traction pin	●	
Integral stamped side panel and hood	●	